Optimized Deep Learning and Sentiment Aware Decision Framework for Personalized Stock Market Investment Support

Group 01 | Manasi Patil • Samiksha Patil • Smith Patil

Guide: Dr. Jaya Gupta

Abstract

- Integrate LSTM-GA forecasting with FinBERT sentiment analysis to improve stock market prediction using price data and financial news.
- Converts predictions into personalized investment guidance based on each investor's risk tolerance and capital constraints.

Dataset

Stock Price Prediction

- **Yahoo Finance/YFinance:** Historical market data via Python library

Recommendation System

- Cryptocurrency
- Commodities
- Energy

Sentiment Analysis

- Approx. 1200 financial news sentences collected from various financial news sources
- Loughran-McDonald Financial Sentiment Word List
- Positive samples: 420
- Negative samples: 390
- Neutral samples: 390

System Design

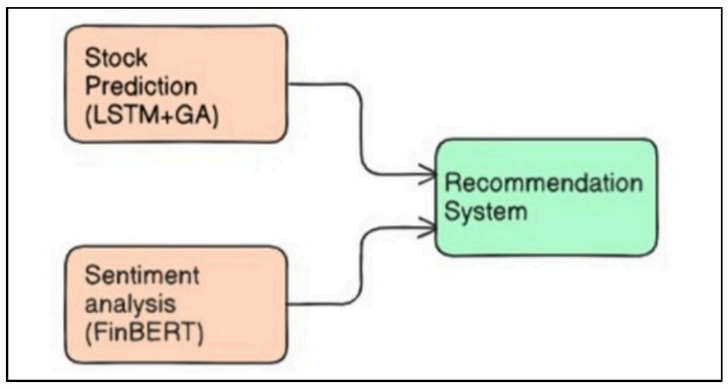

1. **Overall working of the system**

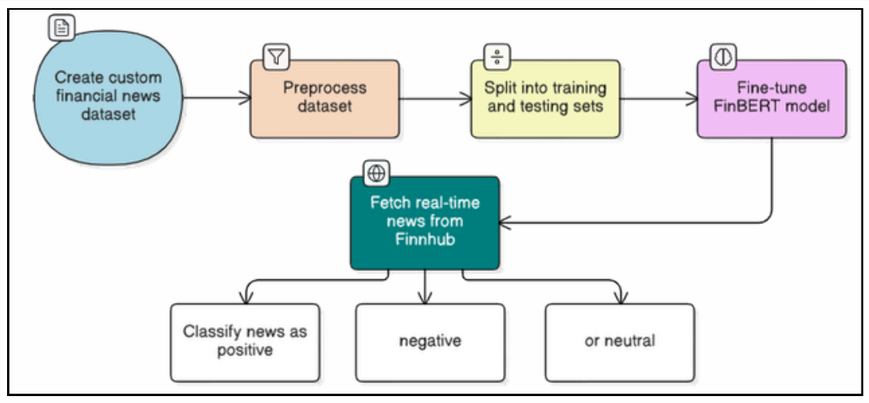

3. **Sentiment Analysis Workflow**

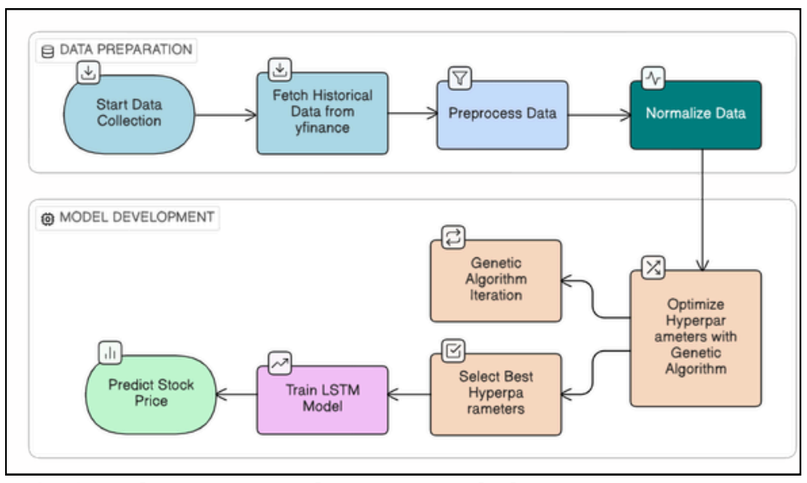

2. **Stock Price Prediction Workflow**

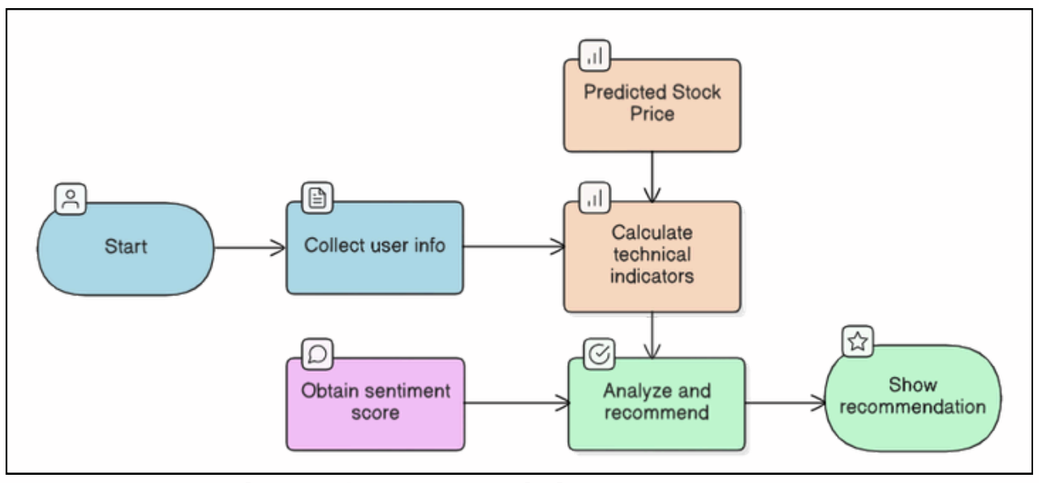

4. **Recommendation System Workflow**

Model Results

1. **Comparison b/w LSTM and GA optimized LSTM**

Method	MAPE	RMSE	MAE
LSTM without GA	2.25%	7.18	5.7
LSTM with GA	1.92%	5.47	4.33

2. **Evaluation of Sentiment Classification**

Class	Precision	Recall	F1-Score	Support
Neutral	0.7	0.58	0.64	12
Positive	0.67	0.6	0.63	10
Negative	0.58	0.78	0.67	9

3. **Evaluation of Trading Signals**

Class	Precision	Recall	F1-Score	Support
HOLD	0.73	0.8	0.76	10
BUY	0.67	0.6	0.63	10
SELL	0.7	0.7	0.7	10

4. **Evaluation of Recommendation System**

Class	Precision	Recall	F1-Score	Support
Macro Avg	0.77	0.76	0.76	190
Weighted Avg	0.78	0.78	0.76	190

SDG Goal

8 DECENT WORK AND ECONOMIC GROWTH

Conclusion

- The hybrid framework enhances prediction accuracy by integrating quantitative price data and financial news insights.
- The system provides clear, profile-based investment recommendations, demonstrating the potential of AI-driven tools to support informed and personalized investment decisions.

References

- Yu, Y.: LSTM-Based Time Series Prediction Model: A Case Study with YFinance Stock Data. (2025)
- Gu, W., Zhong, Y., Li, S., Wei, C., Dong, L., Wang, Z., Yan, C.: Predicting Stock Prices with FinBERT-LSTM: Integrating News Sentiment Analysis. (2024)
- Sharma, V., Rakhra, M., Mathur, G.: Hybrid Approaches for Stocks Prediction and Recommendation System. (2023)
- Chen, S., Zhou, C.: Stock Prediction Based on Genetic Algorithm Feature Selection and Long Short-Term Memory Neural Network. (2021)